HARFORD COUNTY

HYDRAULIC DIAGRAM OF MAJOR COUNTY WATER FEATURES EXISTING AND PROPOSED

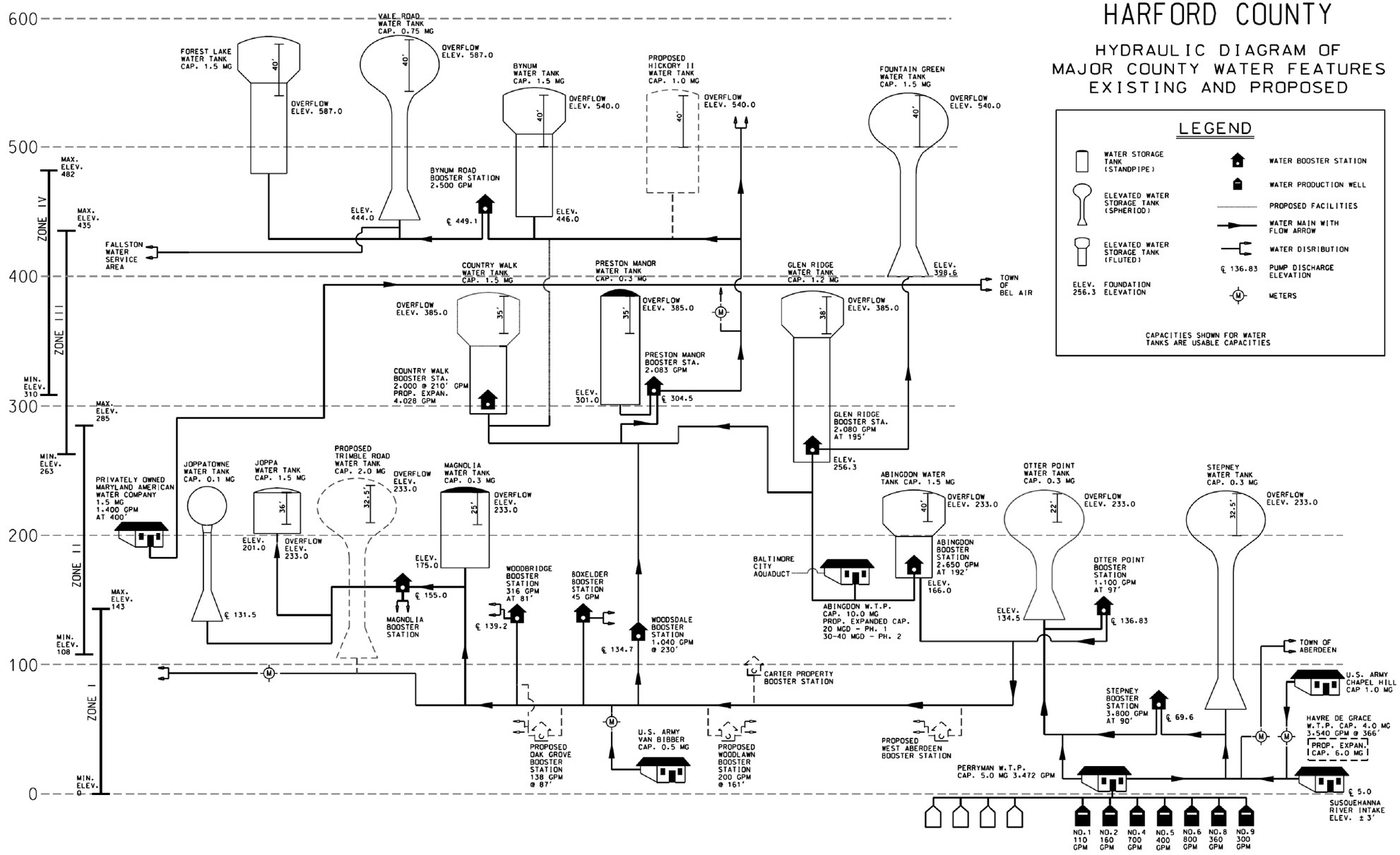

Patton Harris Rust & Associates, Inc.
IN ASSOCIATION WITH
HAZEN AND SAWYER

HARFORD COUNTY
FIRST ZONE WATER SYSTEM EVALUATION AND RECOMMENDATIONS

HARFORD COUNTY
HYDRAULIC DIAGRAM

AUGUST 2008

FIGURE III-2